Sinks

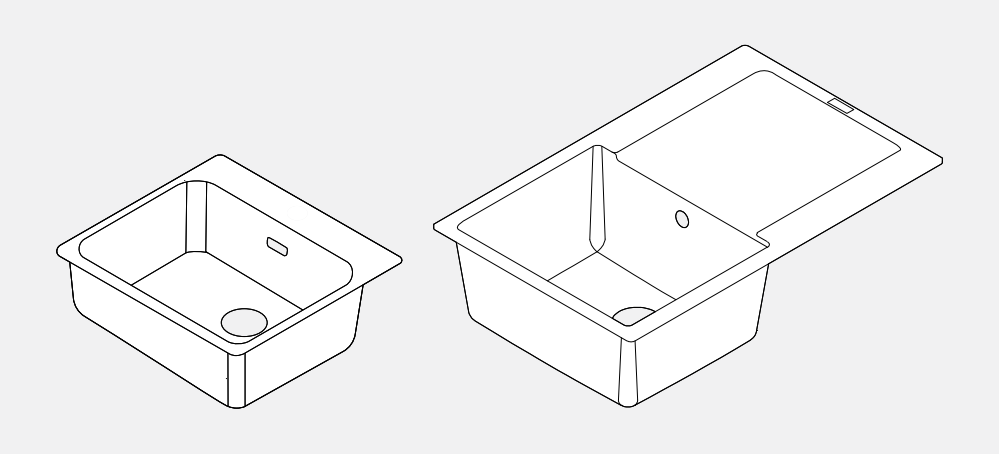

EN	Installation and user manual	Sinks
DE	Installations- und Gebrauchsanweisung	Spüle
FR	Manuel d'installation et mode d'emploi	Eviers
NL	Installatie- en gebruikershandleiding	Spoeltafels
IT	Manuale per l'installazione e l'uso	Lavelli
ES	Manual de instalación y usario	Fregaderos
PT	Manual de instalação e usuário	Lava-louças
EL	Εγχειρίδιο εγκατάστασης και χρήσης	Νεροχύτες
DA	Installations- og brugermanual	Vaske
NO	Installasjons- og brukermanual	Vasker
SV	Installations- och användarmanual	Tvättställ
CS	Montážní a provozní návod	Dřezy
PL	Instrukcja montażu i obsługi	Zlewozmywaki
SK	Návod na inštaláciu a obsluhu	Drezy
RO	Manual de instalare și utilizare	Chiuvete
BG	Ръководство за монтаж и обслужване	Мивки
UK	Посібник зі встановлення та обслуговування	Мийки
RU	Руководство по установке и обслуживанию	Мойки
TR	Kurulum ve kullanım kılavuzu	Evyeler
ZH	安装和用户手册	水槽
AR	دليل التركيب والاستعمال	أحواض

FRANKE

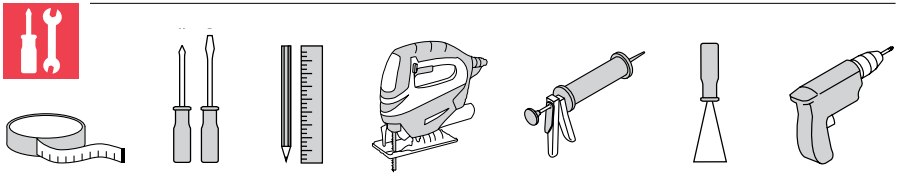

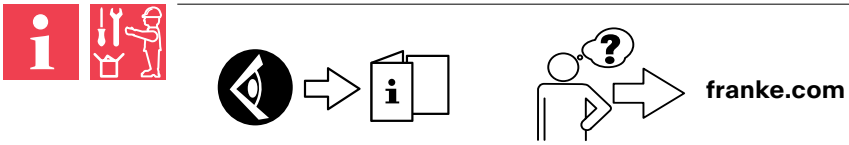

1

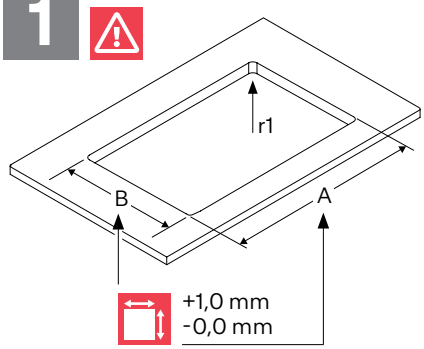

2

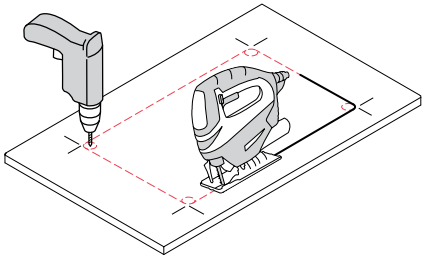

3

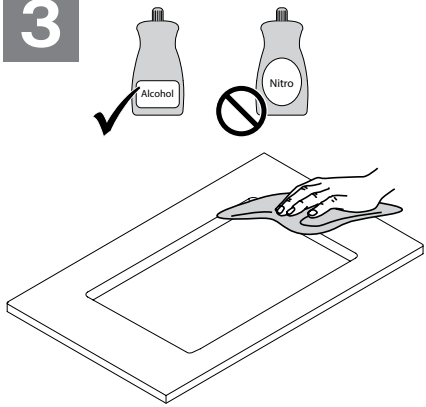

4

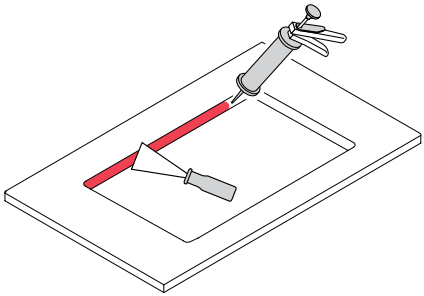

1 Fragranite, Fraceram

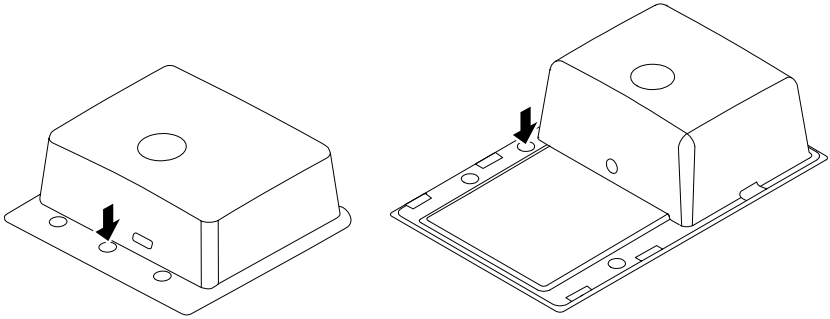

2

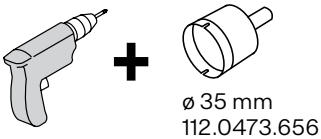

ø 35 mm
112.0473.656

franke.com

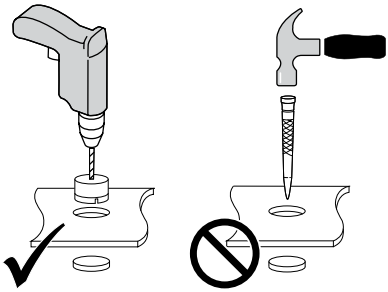

3

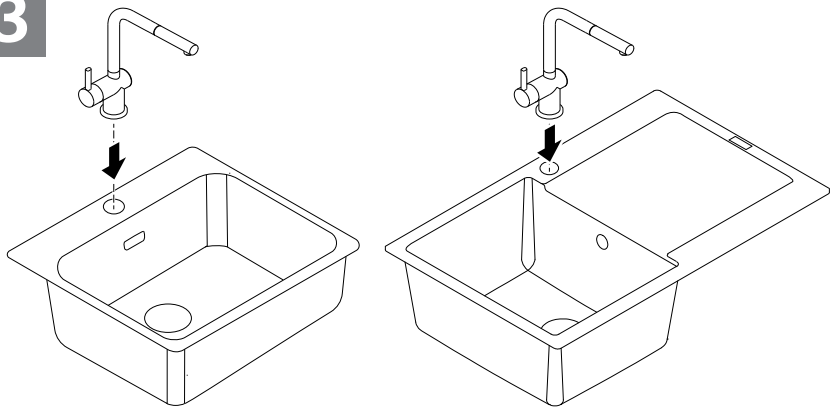

1 Tectonite

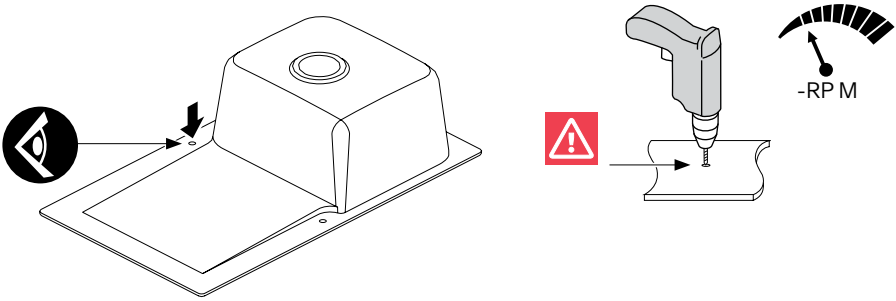

2

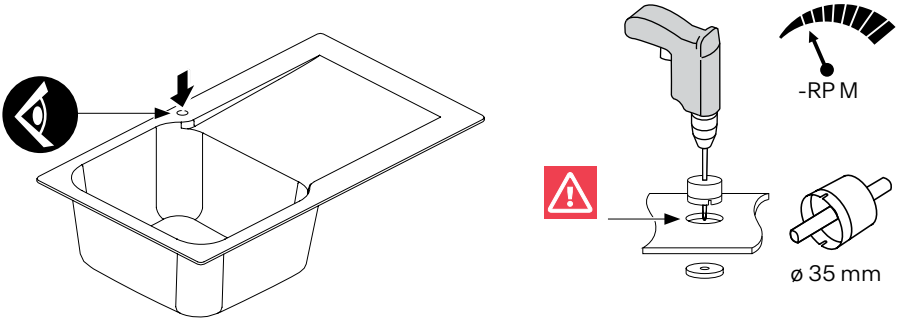

3

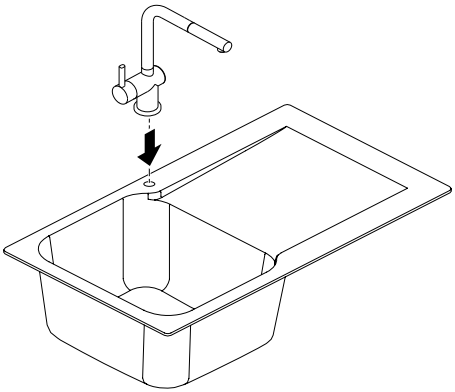

1 A

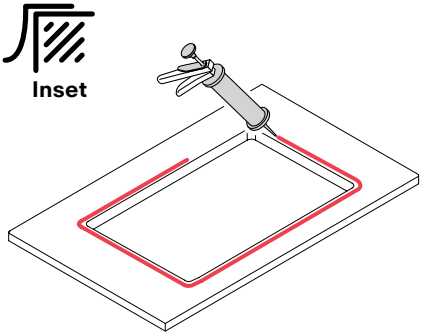

2 A

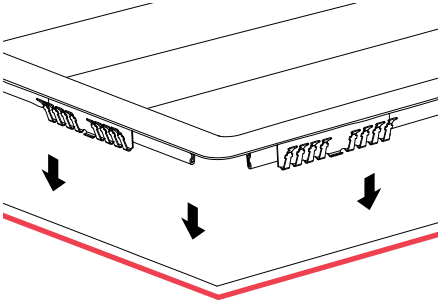

3 A

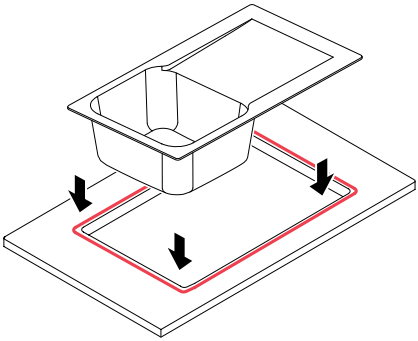

4 A

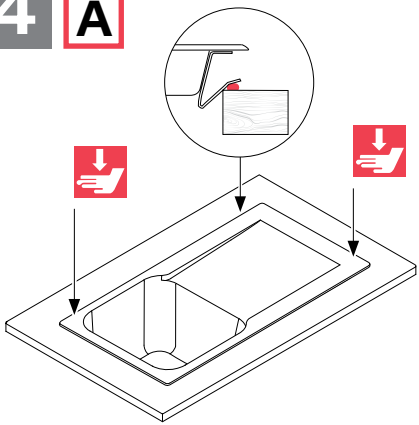

5 A

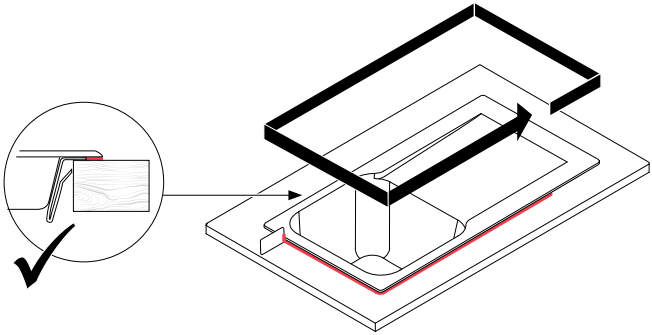

1 B

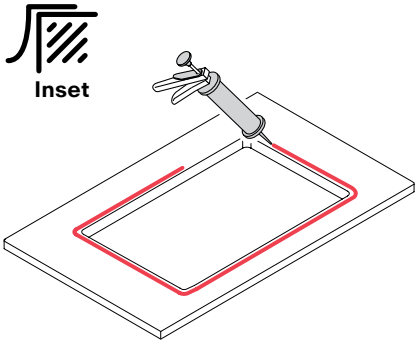

2 B

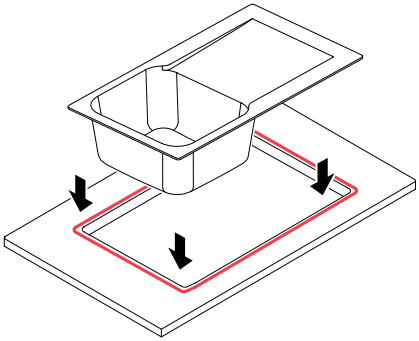

3 B

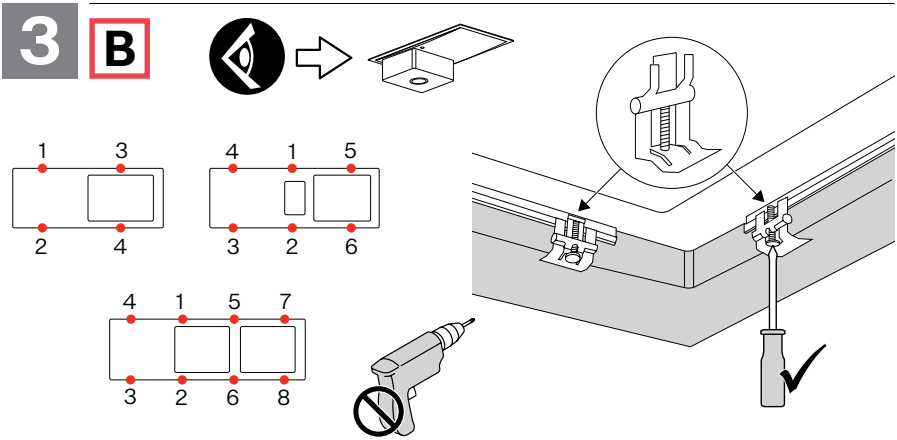

4 B

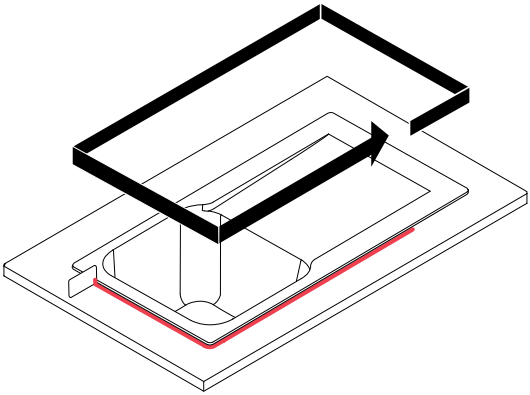

1 C Fraceram

Inset

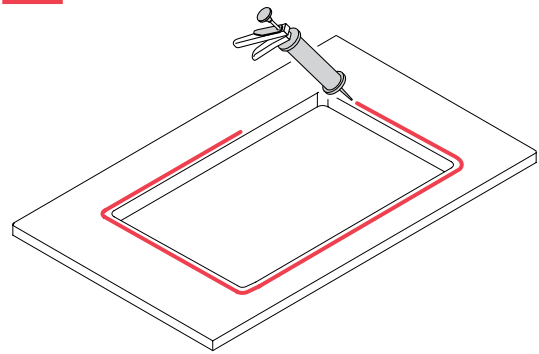

2 C

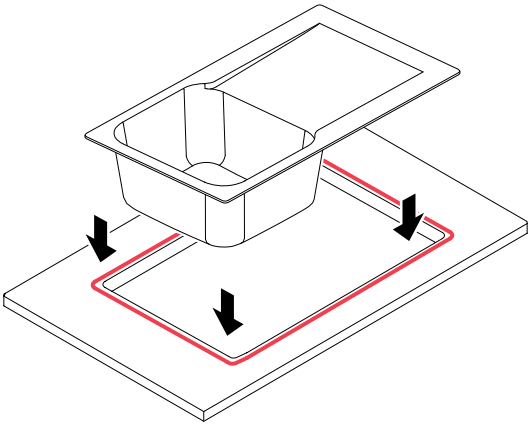

3 C

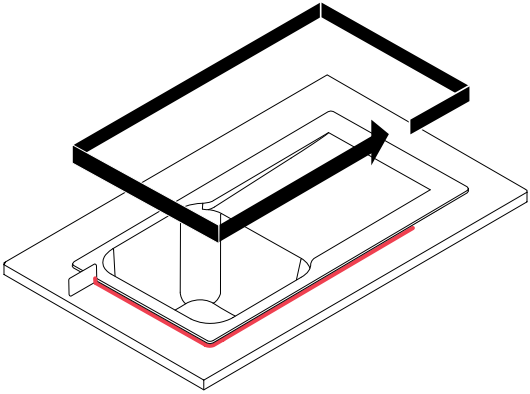

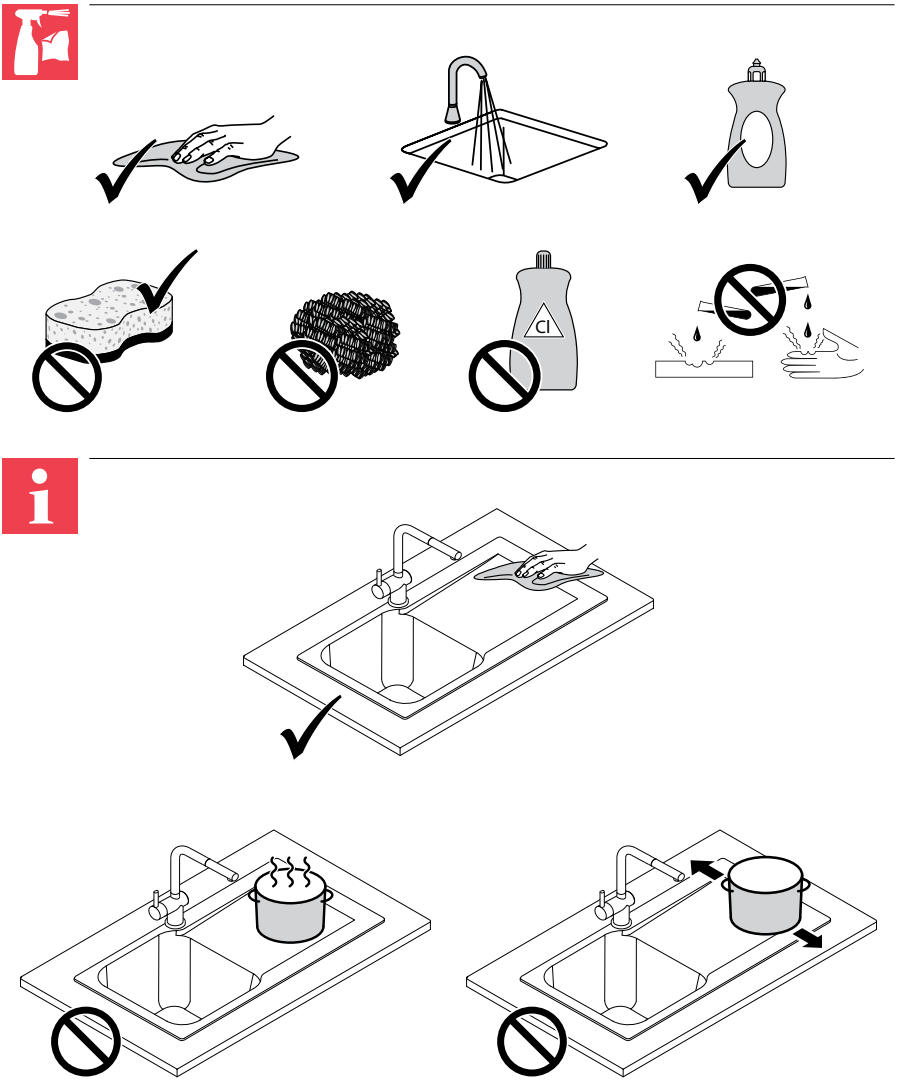

franke.com

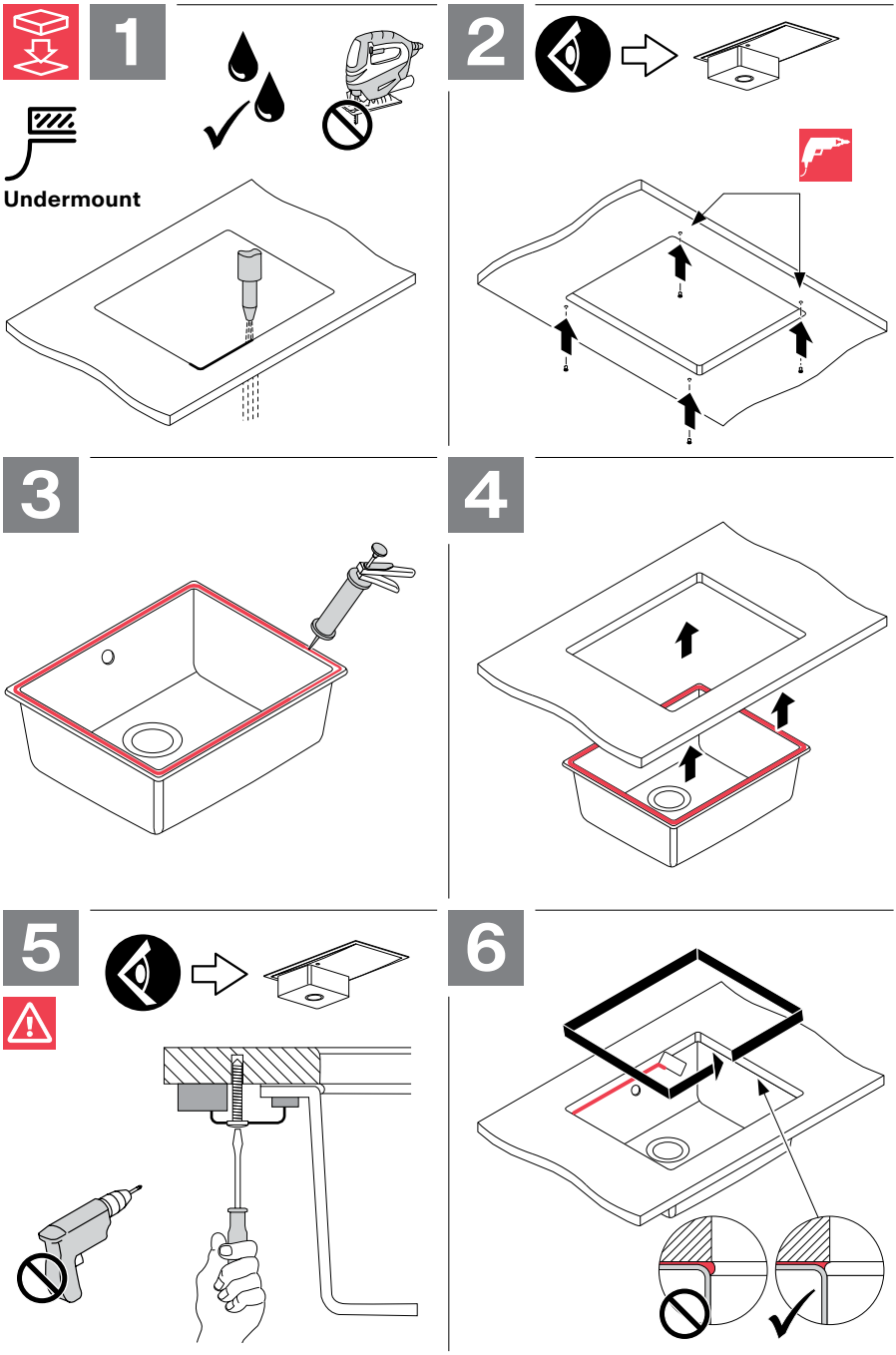
1
Undermount
2
3
4
5
6

Argentina
Industrias Spar
San Luis S.A.
Buenos Aires 1008
Phone +54 11 4311 7655

Australia
Franke Australia
Dandenong South VIC 3175
Phone: +61 3 9700 9100

Belgium
Franke N.V.
9400 Ninove
Phone +32 54 310 111

Brazil
Franke Sistemas de
Cozinhas Ltda
89.219-600 Joinville-SC
Phone 0800-4773000

Canada
Franke Kindred Canada Ltd.
Midland, ON L4R 4K9
Phone +1 866 687 7465

China
Franke (China) Kitchen
Systems Co., Ltd.
Heshan, Guangdong,
529700
Phone 400 882 9898

Czech Republic
Franke s.r.o.
190 00 Praha 9
Phone +420 281 090 445

Denmark
Franke KS Denmark
8520 Lystrup
Phone +45 8624 9024

Finland
Franke Finland Oy
76850 Naarajärvi
Phone +358 15 341 11

France
Franke France S.A.S.
60230 Chambly
Phone +33 130 289 400

Germany
Franke GmbH
79713 Bad Säckingen
Phone +49 7761 52 199

Greece
Franke Hellas S.A.
19003 Markopoulo Attikis
(Athens)
Phone +30 22991 500 00

Hong Kong SAR
Franke Asia Hong Kong
Quarry Bay
Phone +852 3184 1900

India
Franke Faber India Private
Limited
Pune 412208
Phone 1800 209 3484

Italy
Franke S.p.A.
37019 Peschiera del Garda
Toll-free number
800 359 359

Kazakhstan
Franke Kazakhstan Ltd.
040918 Almaty City
Phone +7 727 297 3812

New Zealand
Franke Australia
Dandenong South VIC 3175
Phone: +64 9 964 0400

Norway
Franke KS Norway
8520 Lystrup, Denmark
Phone +47 35 566 450

Poland
Franke Polska Sp. z o.o.
05-090 Raszyn
Phone +48 22 711 6700

Portugal
Franke Portugal S.A.
2735-531 Cacém
Phone +351 21 426 9670

Romania
Franke Romania SRL
Pantelimon 077145
Phone +40 21 350 1550

Russia
Franke Russia GmbH
248033 Kaluga
Phone +7 800 555 1255

Singapore
Franke Singapore Pte Ltd
33 Ubi Ave 3
01-38 Vertex
Phone +65 9838 2542

Slovak Republic
Franke Slovakia s.r.o.
013 24 Strečno
Phone +420 281 090 445

South Africa
Franke South Africa
Durban 4052
Phone +27 31 450 6300

Spain
Franke España S.A.U.
08174 Sant Cugat del Vallès
Phone +34 934 456 768

Sweden
Franke Futurum AB
930 47 Byske
Phone +46 912 405 00

Switzerland
Franke Küchentechnik AG
4663 Aarburg
Phone +41 800 583 243

Thailand
Franke (Thailand) Co., Ltd.
Bangkok 10110
Phone +66 2 013 7900

The Netherlands
Franke Nederland BV
5611 ZX Eindhoven
Phone +31 85 0261 15 11

Turkey
Franke Mutfak ve Banyo
Sistemleri Sanayi
ve Ticaret A.S.
41480 Gebze Kocaeli/
Turkey
Phone +90 262 644 6595

Ukraine
Franke Ukraina LLC
01042 Kyiv
Phone 0 800 301 801

United Kingdom
Franke UK Ltd.
Manchester M22 5WB
Phone +44 161 436 6280

USA
Franke Home Solutions
North America, LLC
Smyrna, TN 37167
Phone 1 800 626 5771

© Franke Technology and Trademark Ltd., Switzerland | 2024-10-01 | V02 | 993.0715.931 | ID: 20259994

franke.com

993.0715.931