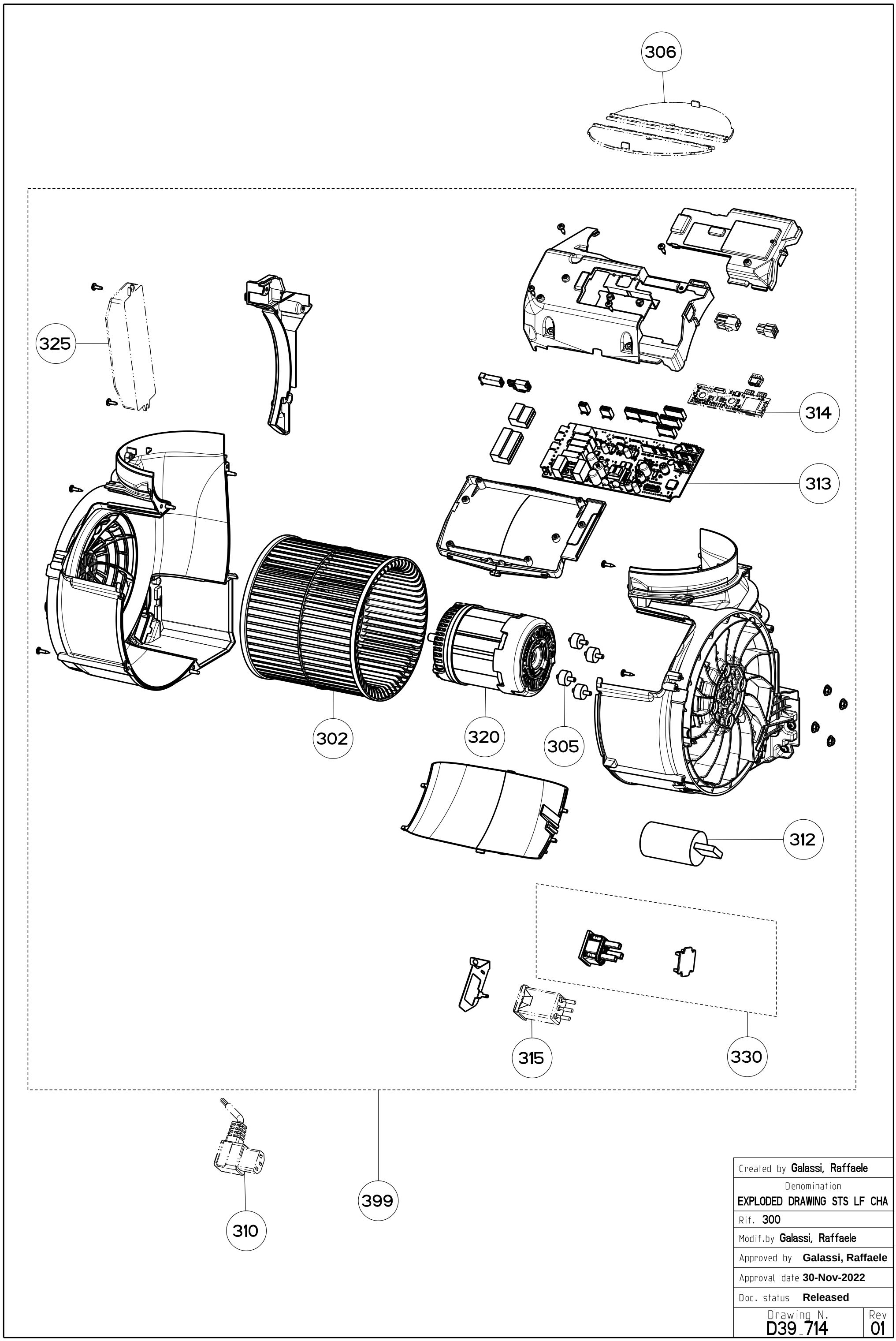

Created by **Galassi, Raffaele**	
Denomination **EXPLODED DRAWING STS LF CHA**	
Rif. **300**	
Modif.by **Galassi, Raffaele**	
Approved by **Galassi, Raffaele**	
Approval date **30-Nov-2022**	
Doc. status **Released**	
Drawing N. **D39_714**	Rev **01**