CULT

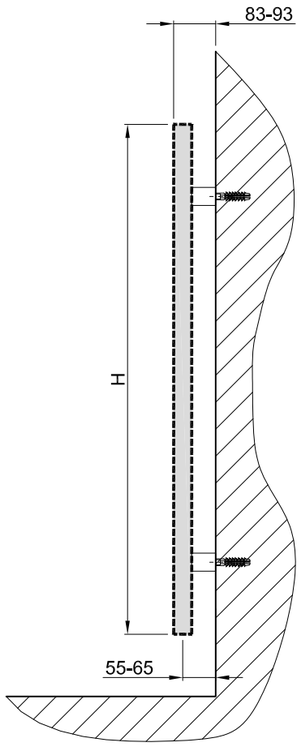

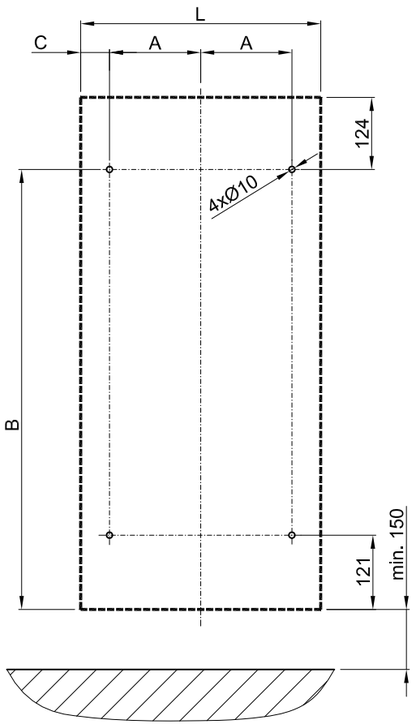

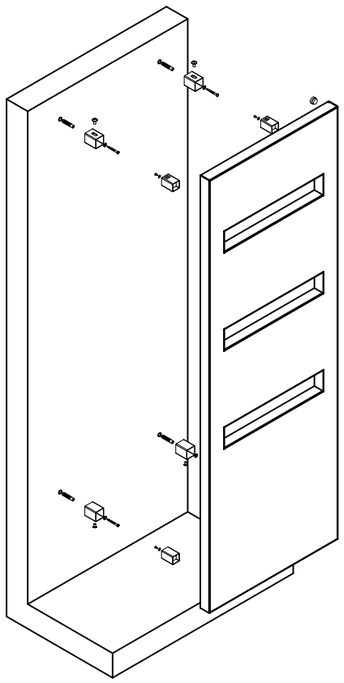

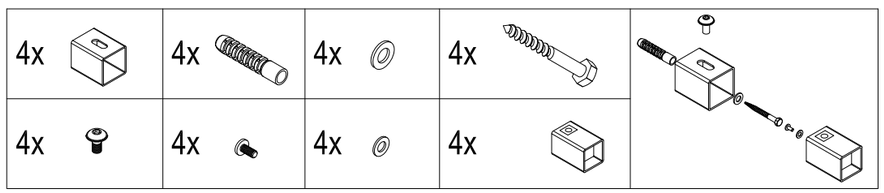

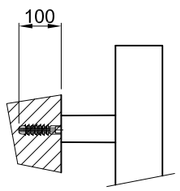

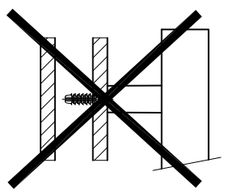

H/L [mm]	A [mm]	B [mm]	C [mm]
1525/456	206	1401	22
1525/606	281	1401	22
1765/456	206	1641	22
1765/606	281	1641	22

ARTE

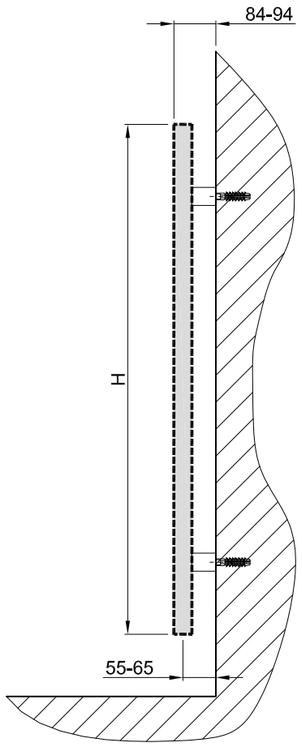

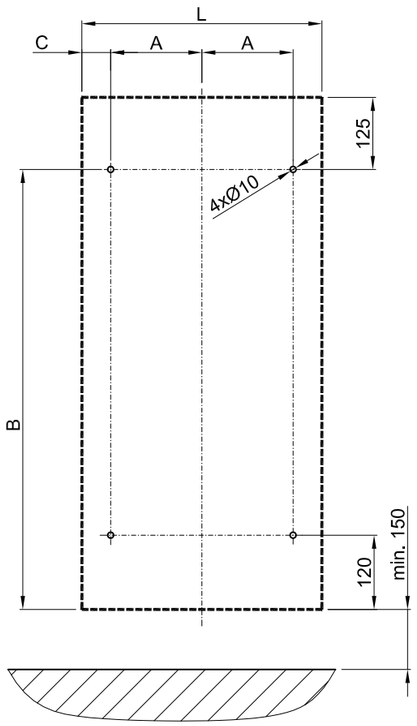

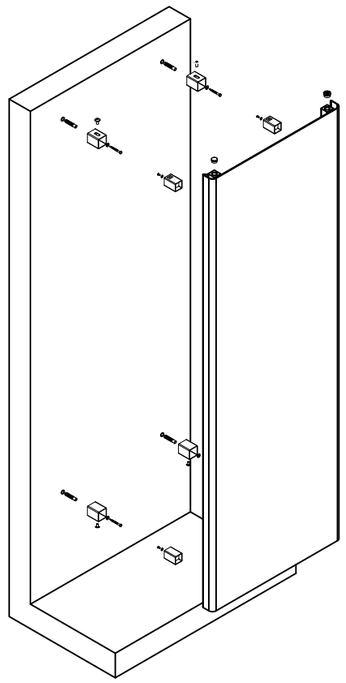

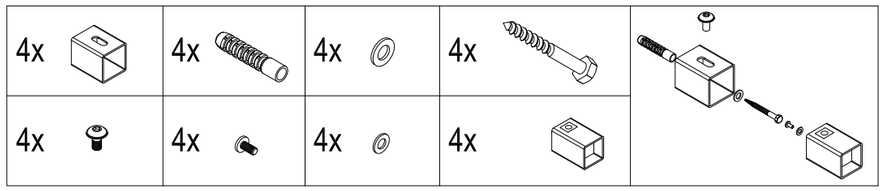

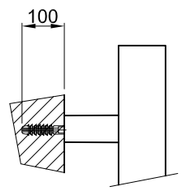

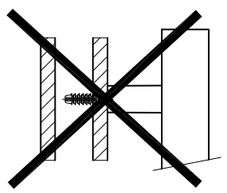

H/L [mm]	A [mm]	B [mm]	C [mm]
1525/456	191	1400	37
1525/606	256	1400	37
1765/456	191	1640	37
1765/606	256	1640	37
2005/456	191	1880	37
2005/606	256	1880	37

03/19 800340874