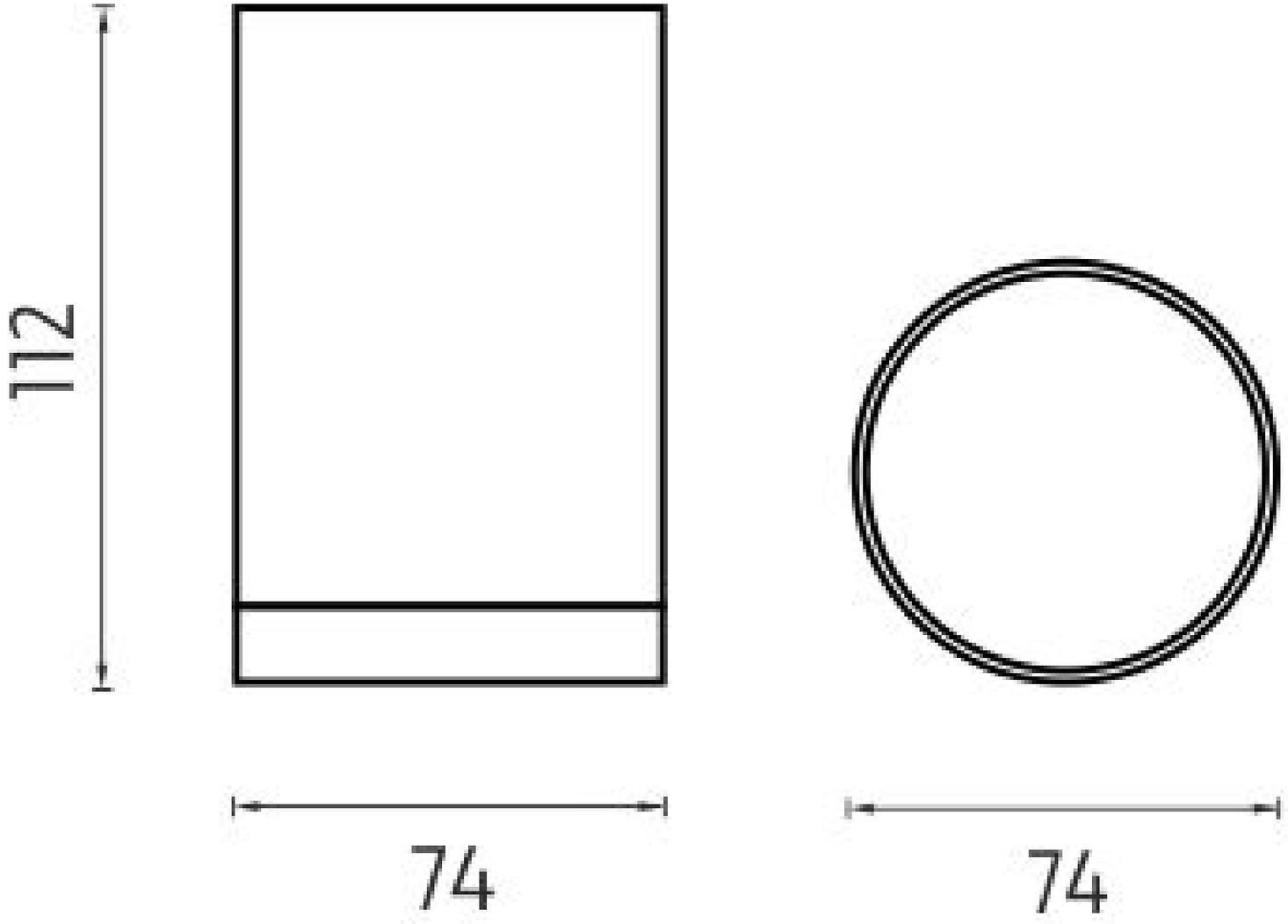

mm