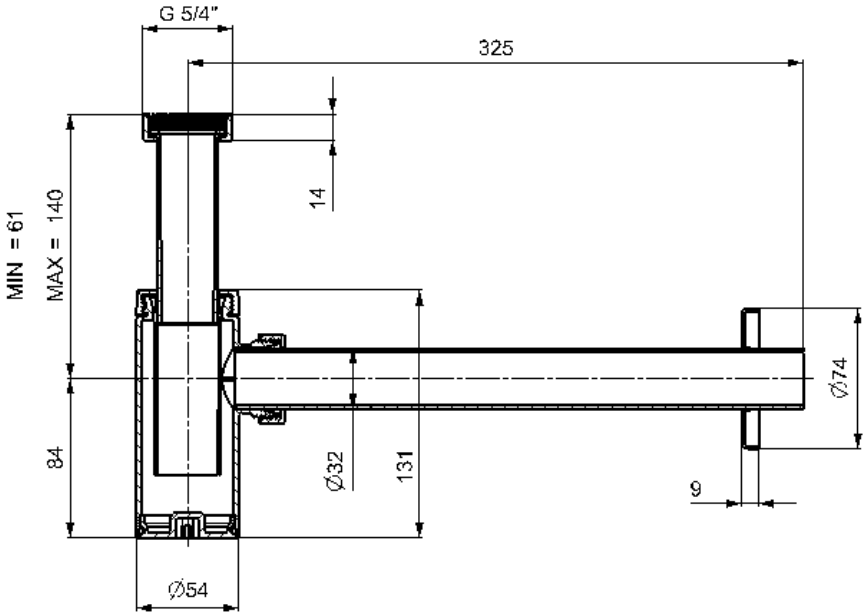
G 5/4"
325
14
MIN = 61
MAX = 140
84
Ø32
131
Ø74
9
Ø54

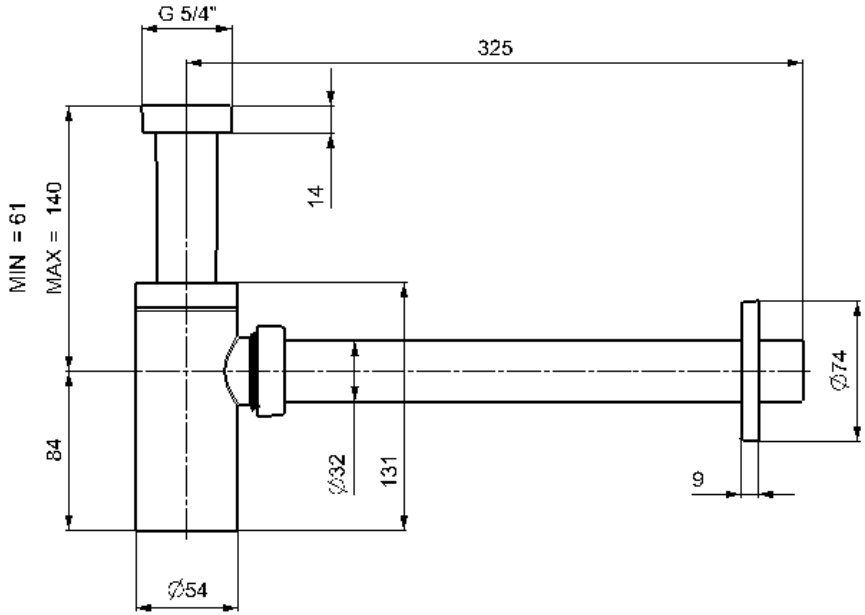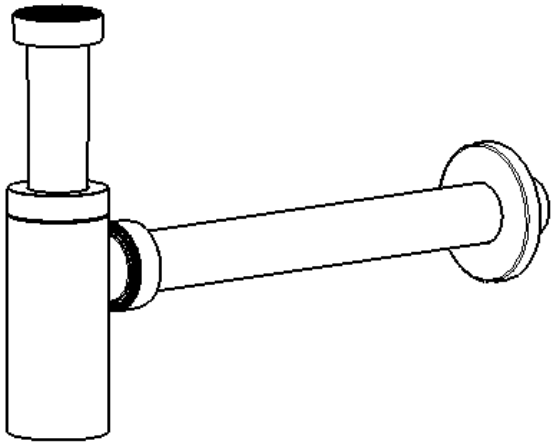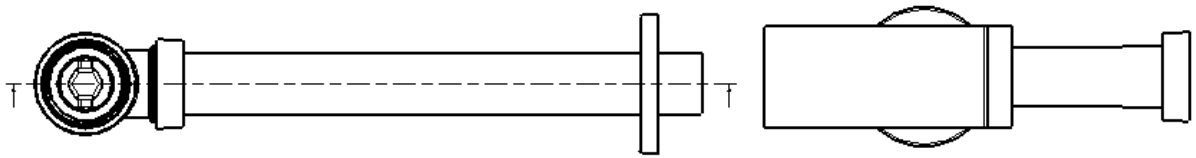
G 5/4"
325
14
MIN = 61
MAX = 140
84
Ø32
131
Ø74
9
Ø54