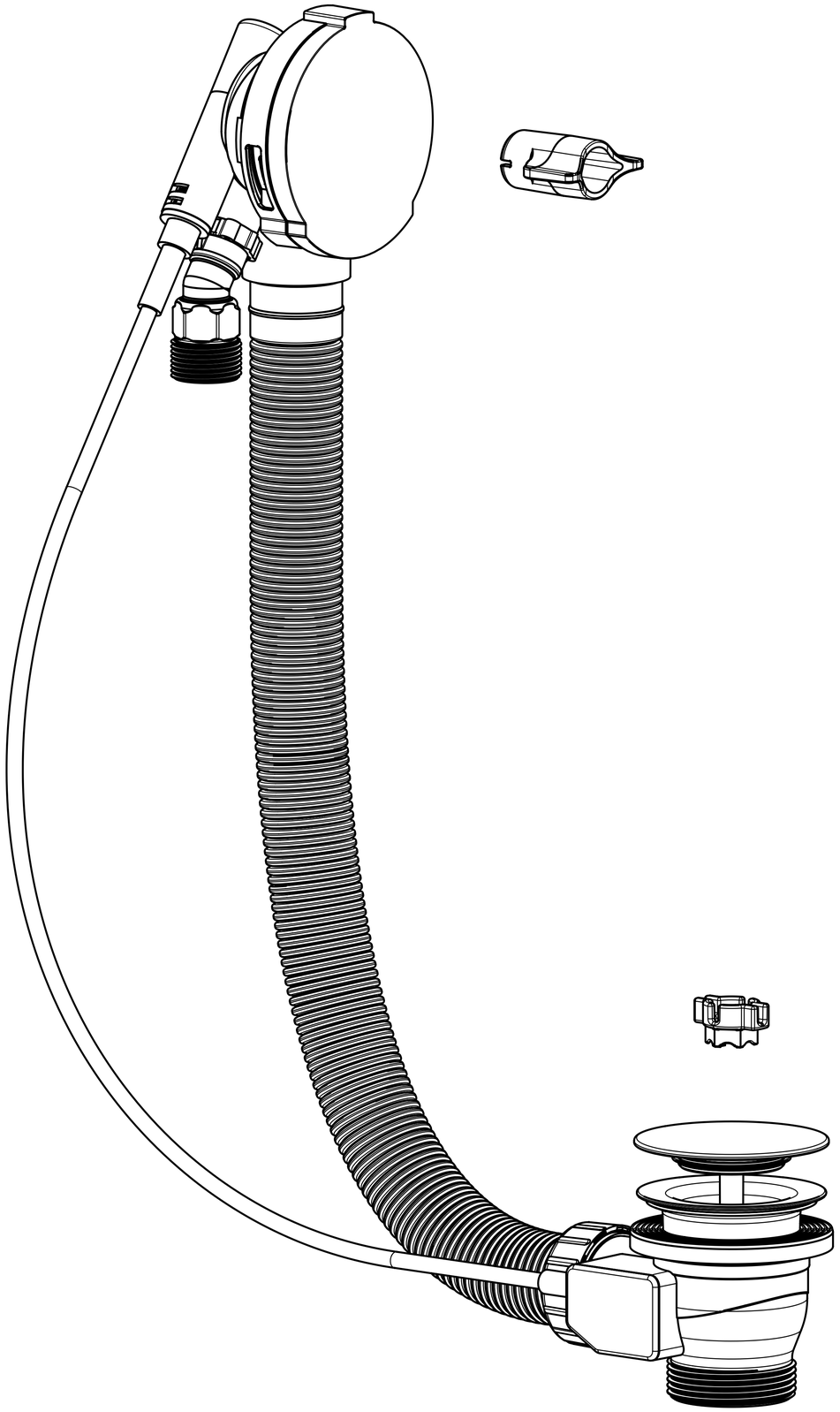

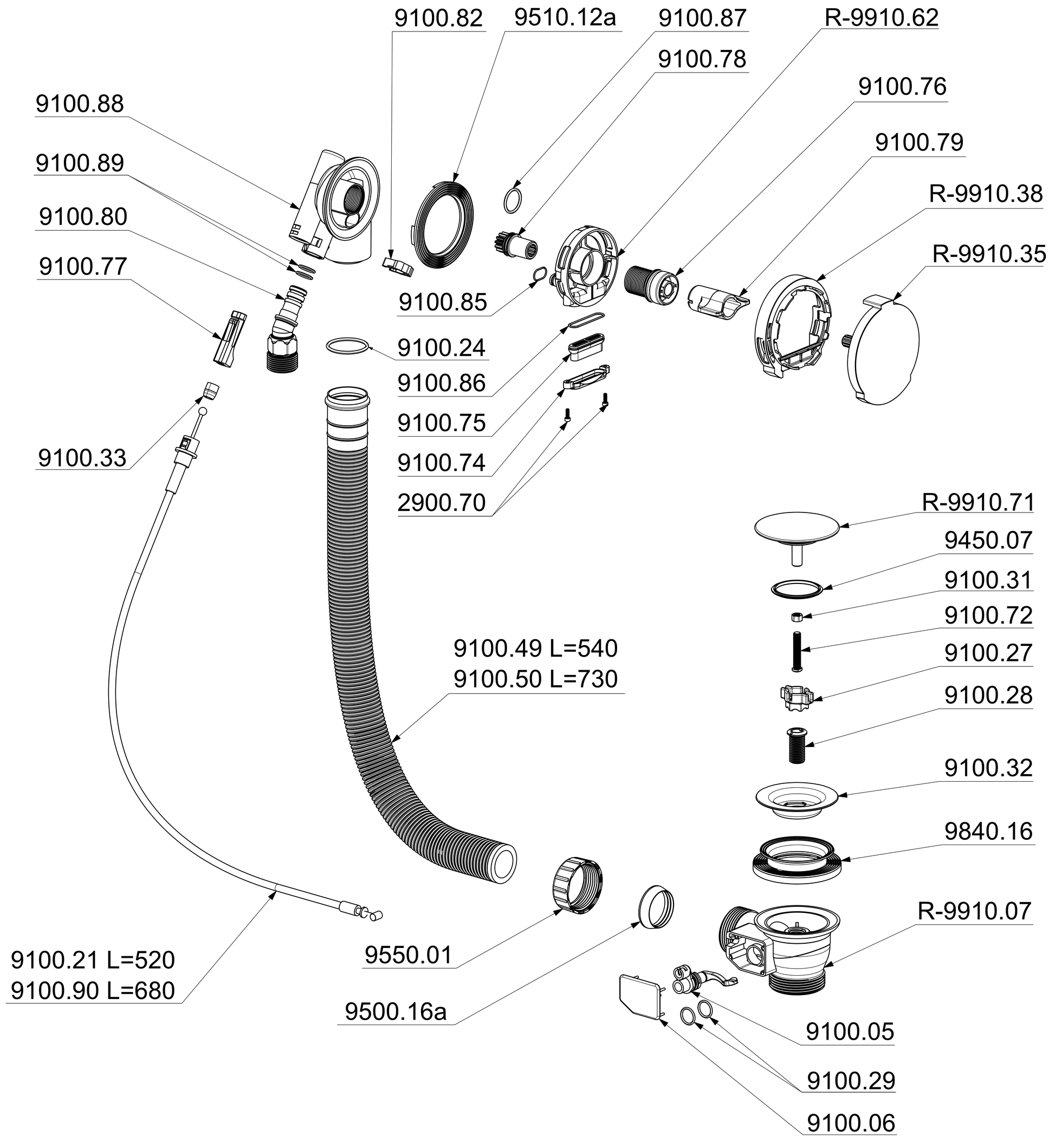
9100.82
9510.12a
9100.87
R-9910.62
9100.78
9100.76
9100.88
9100.79
9100.89
R-9910.38
9100.80
R-9910.35
9100.77
9100.85
9100.24
9100.86
9100.75
9100.33
9100.74
2900.70
R-9910.71
9450.07
9100.31
9100.72
9100.49 L=540
9100.50 L=730
9100.27
9100.28
9100.32
9840.16
R-9910.07
9100.21 L=520
9100.90 L=680
9550.01
9500.16a
9100.05
9100.29
9100.06

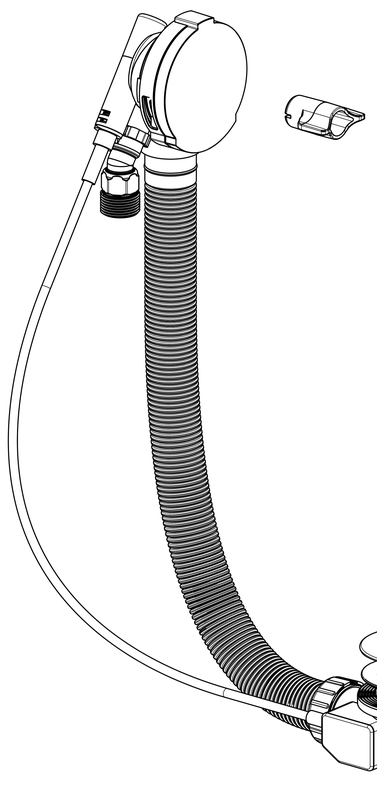

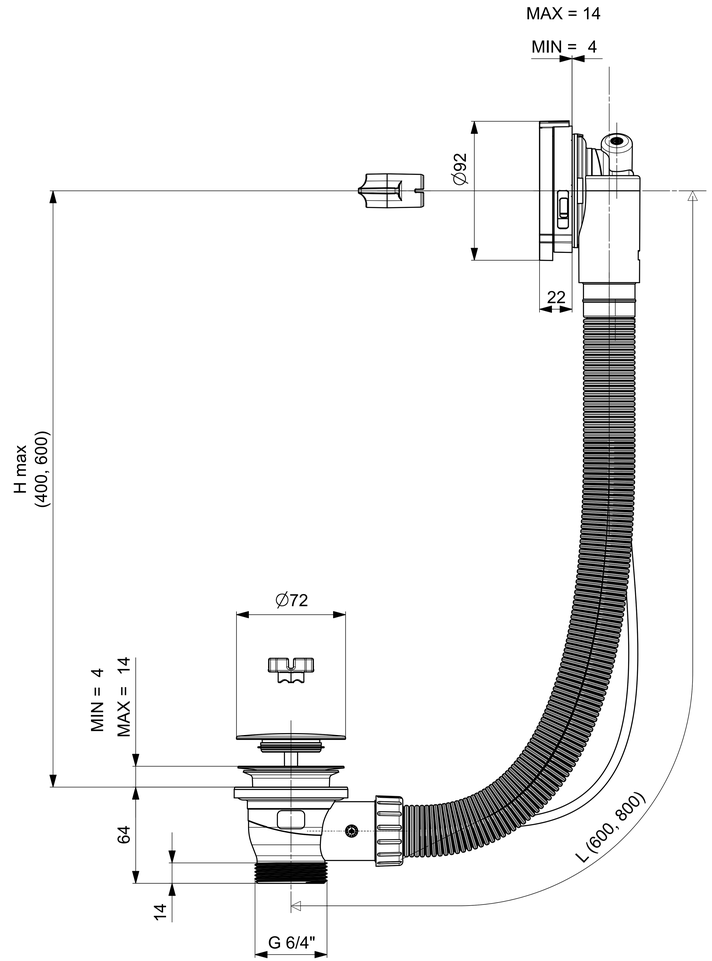
MAX = 14
MIN = 4
∅92
22
H max
(400, 600)
∅72
MIN = 4
MAX = 14
64
14
L (600, 800)
G 6/4"

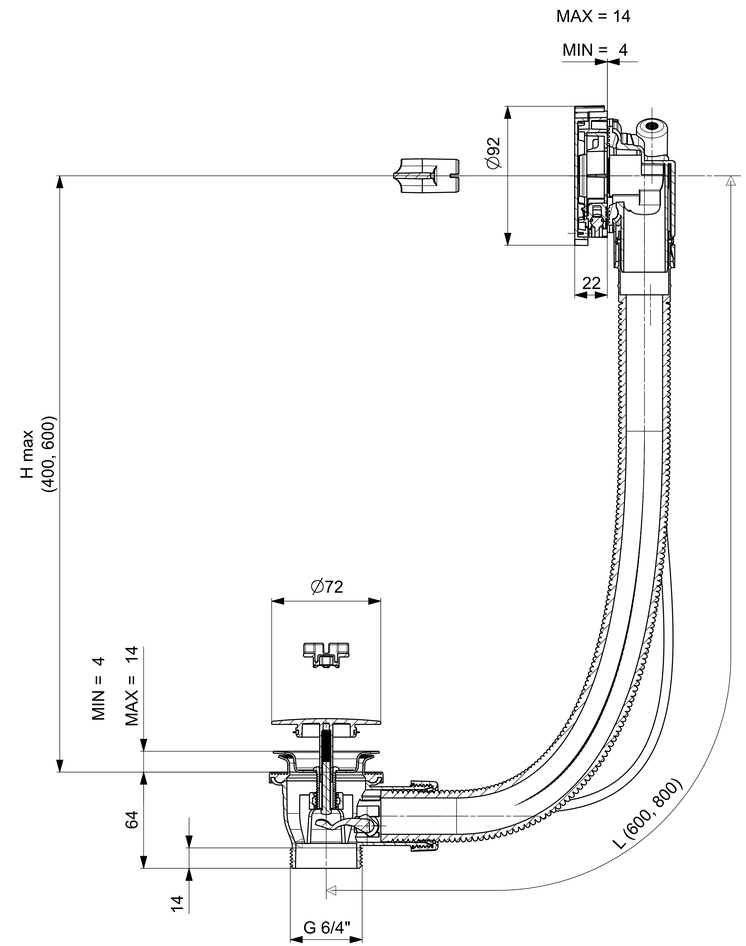
MAX = 14
MIN = 4
∅92
22
H max
(400, 600)
∅72
MIN = 4
MAX = 14
64
14
L (600, 800)
G 6/4"

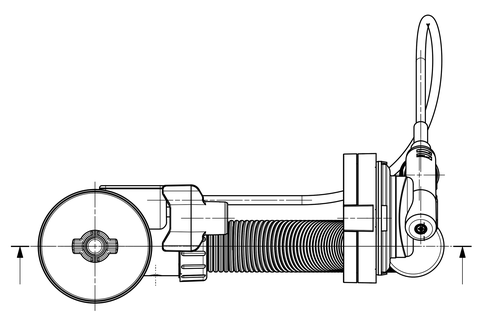

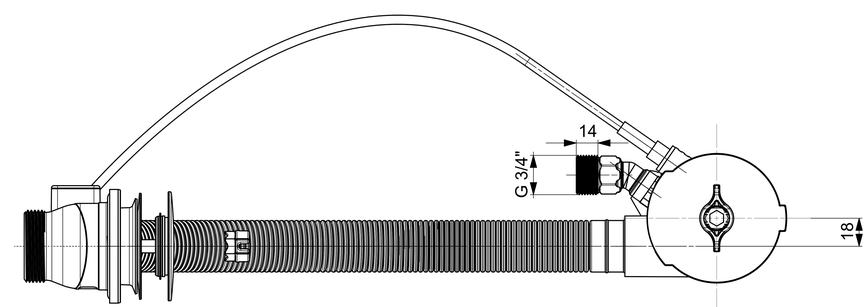
14
G 3/4"
18

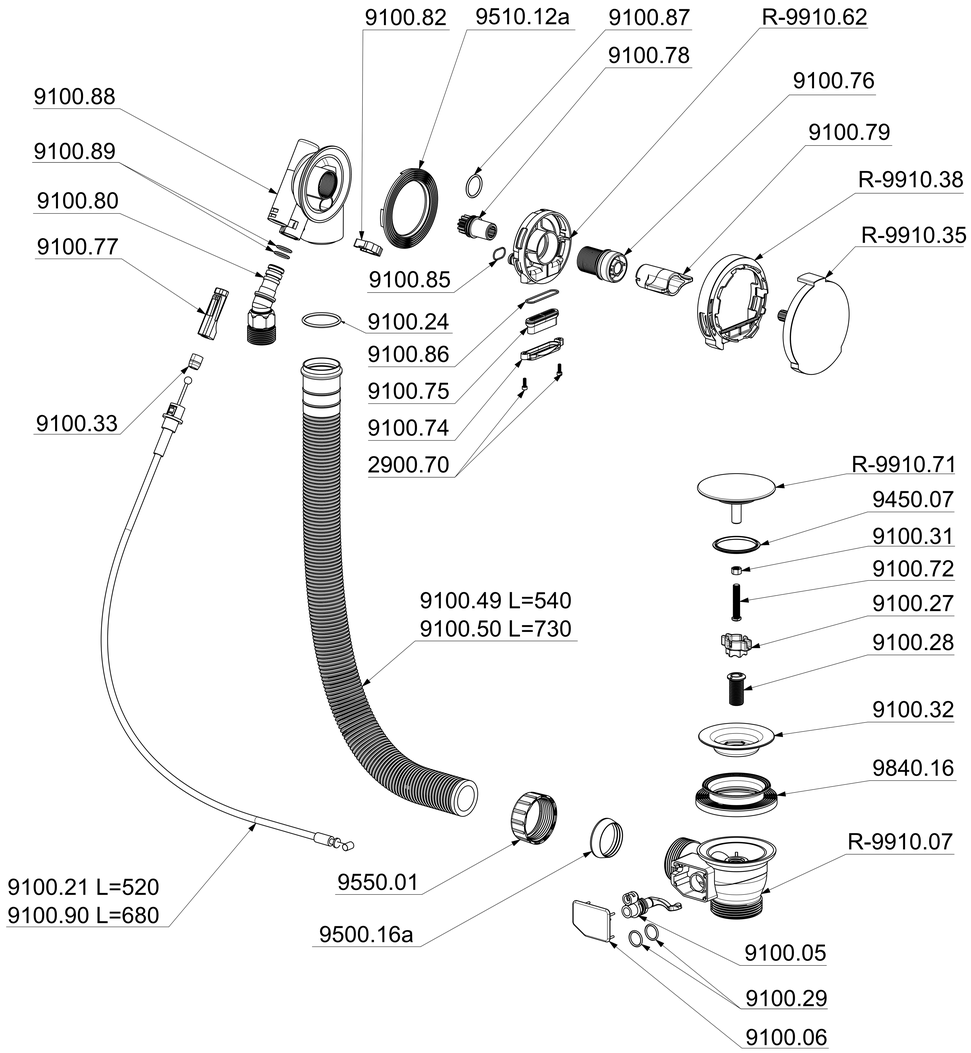
9100.82
9510.12a
9100.87
9100.78
R-9910.62
9100.76
9100.79
R-9910.38
R-9910.35
9100.88
9100.89
9100.80
9100.77
9100.85
9100.24
9100.86
9100.75
9100.74
2900.70
9100.33
R-9910.71
9450.07
9100.31
9100.72
9100.27
9100.28
9100.32
9840.16
9100.49 L=540
9100.50 L=730
R-9910.07
9100.21 L=520
9100.90 L=680
9550.01
9500.16a
9100.05
9100.29
9100.06

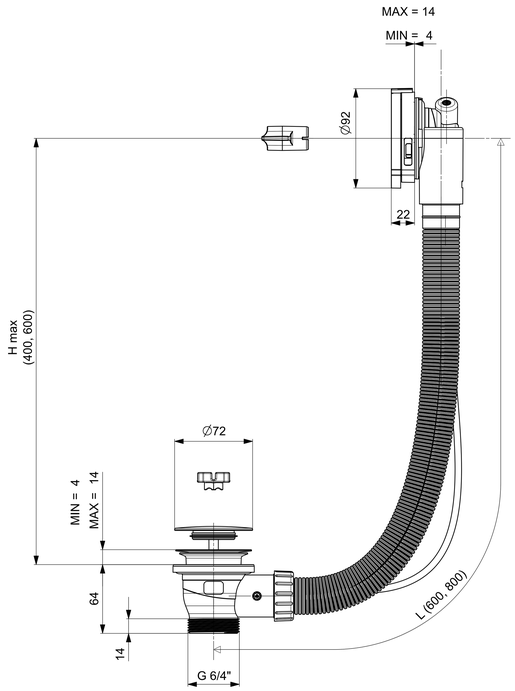
MAX = 14
MIN = 4
Ø92
22
H max
(400, 600)
Ø72
MIN = 4
MAX = 14
64
14
G 6/4"
L (600, 800)

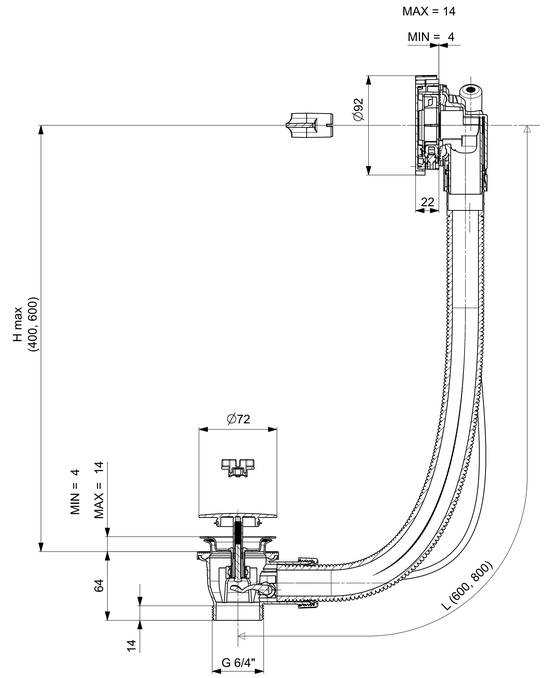
MAX = 14
MIN = 4
Ø92
22
H max
(400, 600)
Ø72
MIN = 4
MAX = 14
64
14
G 6/4"
L (600, 800)

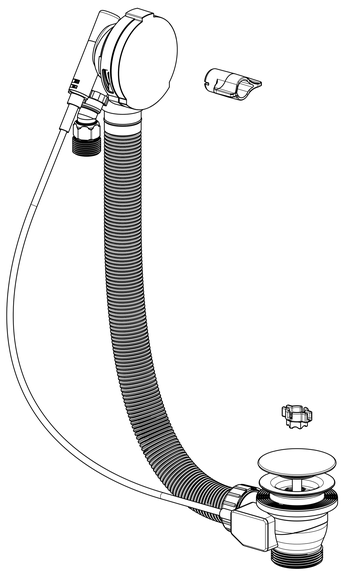

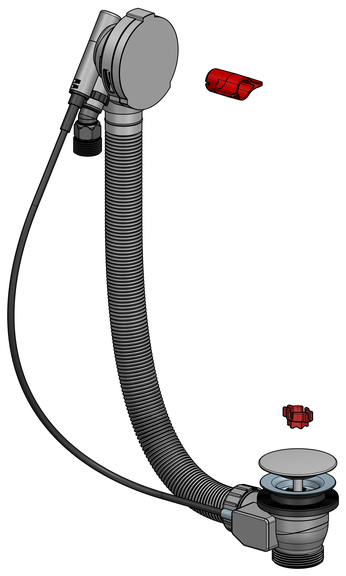

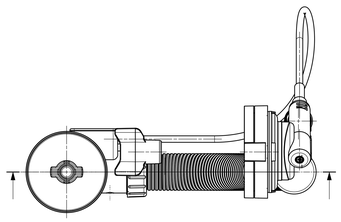

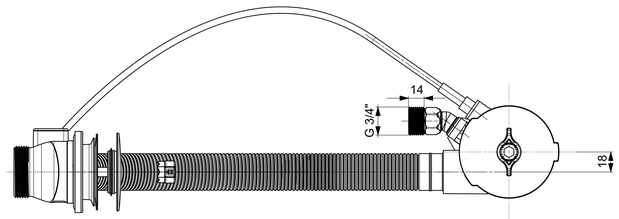
14
G 3/4"
18