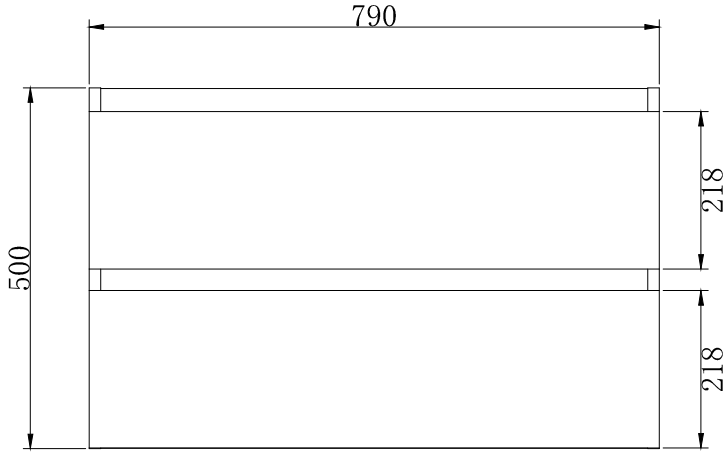
790
500
218
218

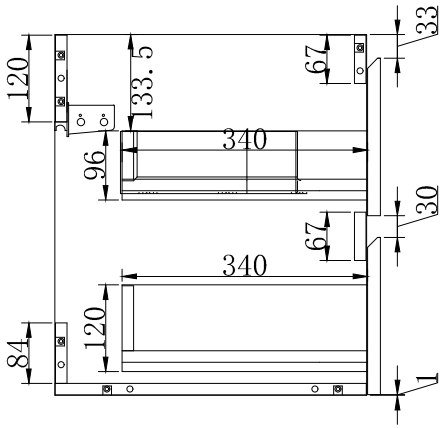
120
133.5
67
33
340
96
30
67
340
120
84
1

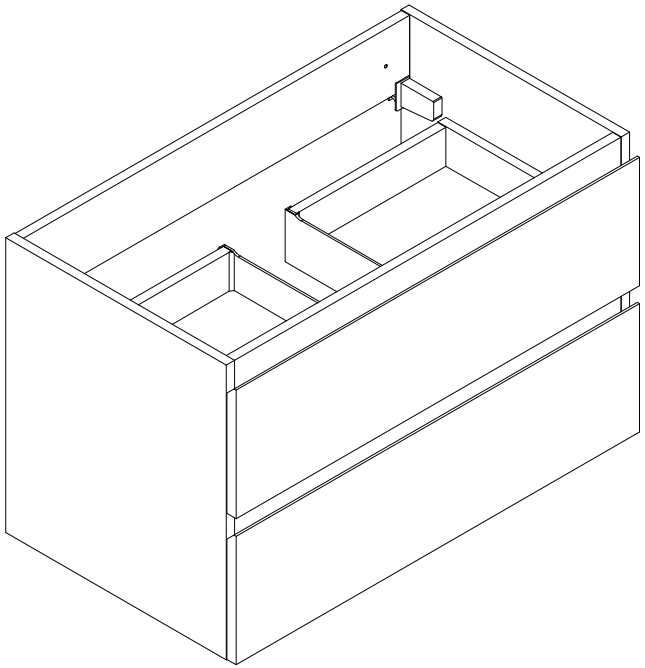

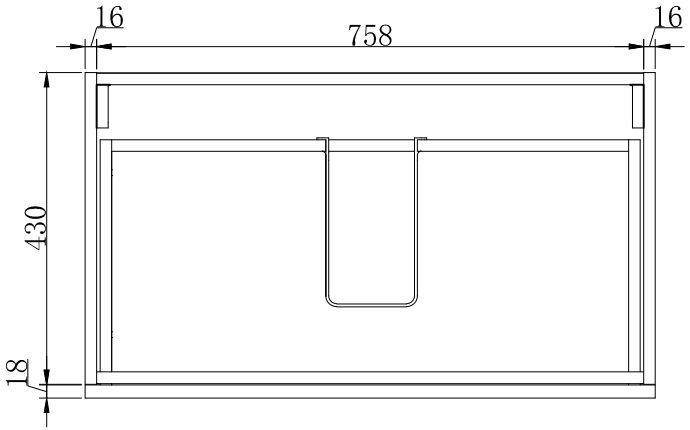
16
758
16
430
18

SAT

A–A

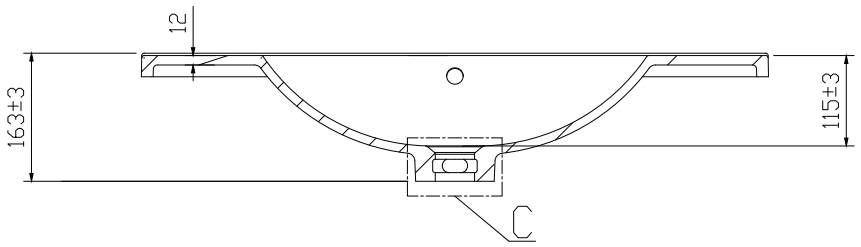
12
163±3
115±3
C

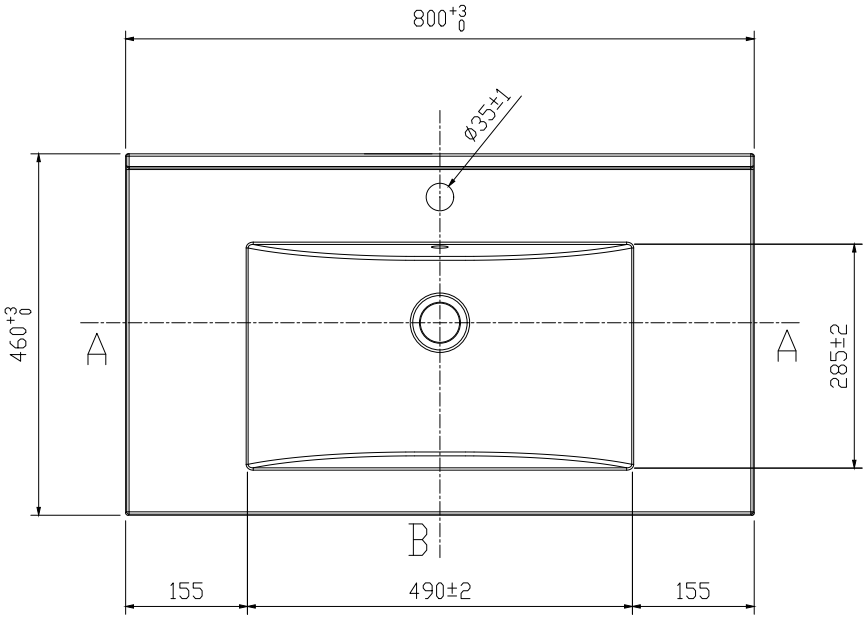
800 +3 0
ø35±1
460 +3 0
A
A
285±2
B
155
490±2
155

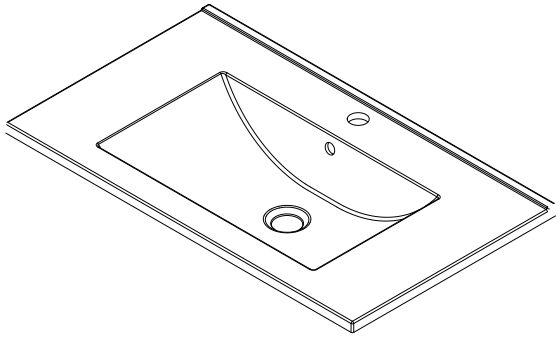

C
1:1

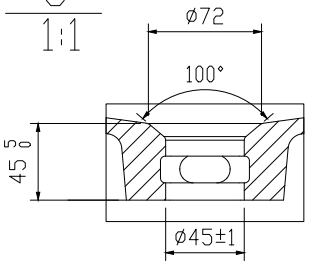
ø72
100°
45 5 0
ø45±1

SAT