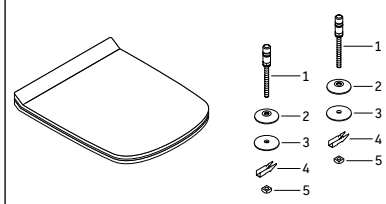

006051..00, # 006051..96
006059..00, # 006059..96
006371..94, # 006379..00

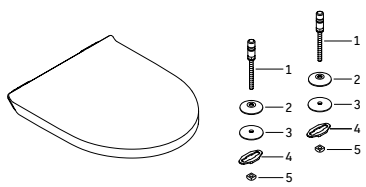

002611..00, # 002619..00

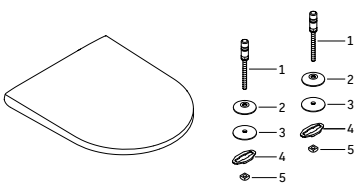

002161..00, # 002169..00

1

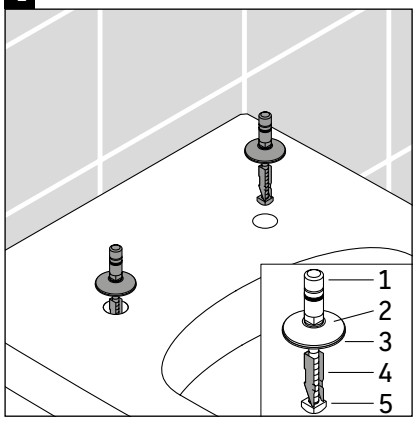

2

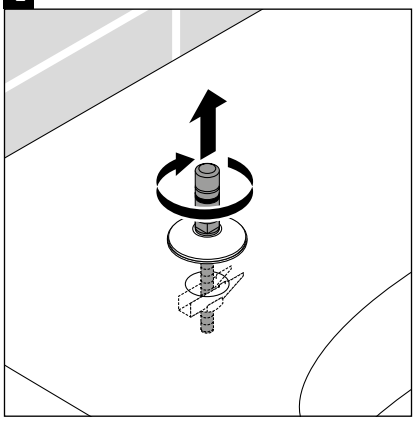

3

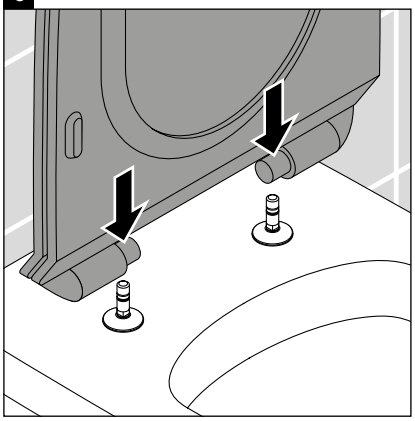

4

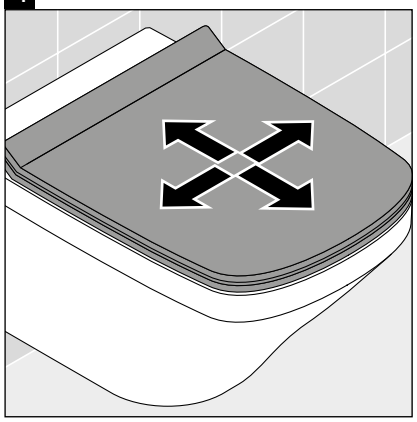

5

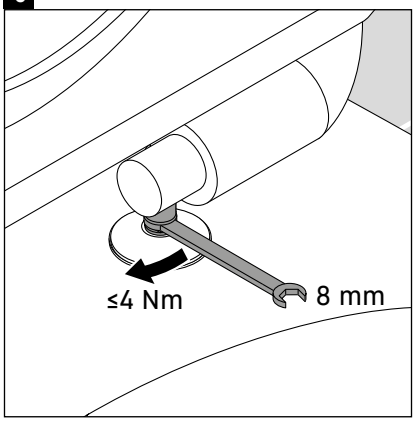

108718/MA211
Best.-Nr. 54063/20.11.7 We reserve the right to make technical improvements and enhance the appearance of the products shown.

DURAVIT AG, Werderstr. 36, 78132 Hornberg, Germany, Phone +49 78 33 700, Fax +49 78 33 70 289, info@duravit.de, www.duravit.de